CATHODIC PROTECTION

THEORY & PRINCIPLES OF CATHODIC PROTECTION

AN INTRODUCTION TO CATHODIC PROTECTION.

1.0 INTRODUCTION

1.1 THE CORROSION PROCESS

Most metals occur in nature in the chemically combined state and energy must be supplied to win them from their ores. Furthermore, once extracted and exposed to natural environments (e.g. moist aerated conditions), these same metals attempt to return to the combined state spontaneously. It is only by the expenditure of energy that this spontaneous degradation of the metal can be prevented. Clearly, the combined state is energetically preferable for most metals

The spontaneous passage of the metal into the chemically combined state is called corrosion. Although the process is obviously inevitable in most cases and its prevention difficult, we find in practice that its control is both possible and practicable.

One means of controlling corrosion is by the use of cathodic protection. To many people unfamiliar with the principles of corrosion, cathodic protection is not only "newfangled" but also a rather dubious method of corrosion control. It is salutary to remind ourselves that the first conscious application of cathodic protection and statement of the principles of the technique, were made by Sir Humphrey Davy in 1824. Using small buttons of zinc, or iron nails, attached to the protective copper sheathing led on the hulls of wooden warships, Davy was able to arrest “the rapid decay of the copper”. So successful did cathodic protection prove in this case that it brought with it an unforeseen problem: the copper no longer corroded, biocidal copper ions were no longer released, and marine fouling of the hull became rampant with an inevitable loss of performance by the ship. Since the latter was regarded as more undesirable than the corrosion, cathodic protection was discontinued. Nevertheless, it may be seen that cathodic protection is by no means new or of doubtful effectiveness in controlling corrosion.

For reasons that will emerge, later, cathodic protection can only be applied when the metal is exposed to an electrolytically conducting environment (i.e. one in which the current carriers are ions). Thus, the application of the technique is virtually restricted to aqueous environments and the control of aqueous corrosion. This is not so great a restriction as may at first appear, since cathodic protection may be used in moist soils and sands as well as in natural waters, brines and many aqueous process fluids. Nevertheless, it does suggest that we should understand the nature of aqueous corrosion in order to understand cathodic protection.

1.2 WHAT IS AQUEOUS CORROSION?

We defined corrosion above as the passage of the metal into the chemically combined state. Consider the dissolution of iron in a dilute acid solution to produce hydrogen gas:

$$Fe + 2HC1 \rightarrow FeCl_2 + H_2 \qquad (1)$$

The metal passes spontaneously into the combined state, i.e. iron corrodes in this chemical reaction. If we assume, not unreasonably, that the acid and the ferrous chloride are fully ionised, then chloride ions are common to both sides of the equation and can be omitted:

$$Fe + 2H^+ \rightarrow Fe^{2+} + H_2 \qquad (2)$$

The equation makes the general statement that in the presence of any hydrogen acid, iron will corrode to give a soluble cation and hydrogen gas. This generalisation is broadly true.

We may simplify our discussion of the corrosion reaction by considering the metallic and non-metallic reactants separately:

$$Fe \rightarrow Fe^{2+} + 2e \qquad (3)$$

$$2H^+ + 2e \rightarrow H_2 \qquad (4)$$

The corrosion reaction which appeared in the first instance as a chemical reaction (equations 1 & 2) has now been subdivided into two electrochemical reactions, since it has been found necessary to add two electrons to equations 3 & 4 to preserve the charge balance. Even so, if 3 & 4 are added together they yield equation 2 directly.

The electrochemical reactions which involve the release of electrons and, in corrosion, the consumption of metal (e.g. equation (3)) are oxidation reactions in the broadest sense and are referred to as anodic reaction in electrochemical discussions. Similarly, electrochemical reactions which consume electrons and, in corrosion, consume a solution species (e.g. equation (4)) are reduction or cathodic reactions.

When aqueous corrosion occurs, the metal spontaneously takes up an electrode potential which may he relatively constant or vary markedly, depending upon the particular nature and circumstances of the corrosion reaction. More important, from the point of view of this discussion, it is a matter of experience that there is no measurable build up of charge as the corrosion reaction proceeds. It follows therefore that the rate of production of electrons is equal to the rate of their consumption, or that the anodic (oxidation) rate is equal to the cathodic reduction rate. We immediately see that in principle we can moderate the corrosion reaction by interfering with either of the electrochemical processes that combine to give it. All corrosion control techniques take advantage of this fact.

In summary, corrosion is the spontaneous chemical reaction of a metal with its surroundings. In aqueous solutions, it proceeds by an electrochemical mechanism involving oxidation of the metal and concomitant reduction of species in the aqueous environment.

1.3 AN ALTERNATIVE CATHODIC REACTION

The reaction of iron in dilute hydrochloric acid was taken as an example of corrosion. From the discussion, it emerged that the acid provides a cathodic reaction to feed the dissolution of the iron viz. the hydrogen evolution reaction. The reactant in this reaction is the.

hydrogen ion. Although aqueous solutions of acids contain high concentrations of hydrogen ions, even water itself contains a limited concentration (10-lg ions/litre at 25 ^{o}C) and so is able to provide the reactant for the hydrogen evolution reaction in favourab1e circumstances. Thus hydrogen evolution is a cathodic reaction that can be associated with natural environments.

In. nature, water is very commonly aerated. The dissolved oxygen then present may equally be a cathodic reactant since it can be reduced as follows:

$$O_2 + 4H^+ + 4e \rightarrow 2H_2O \qquad (5)$$

Indeed, from a thermodynamic point of view, it is a more plausible cathodic reactant since any aqueous environment that permits the hydrogen evolution reaction to occur as part of a corrosion reaction must equally permit the oxygen reduction reaction. The converse is not true.

A corrosion reaction may be written in which the anodic reaction is given by equation 3 and the cathodic reaction by equation 5:

$$Fe \rightarrow Fe^{2+} + 2e \qquad (3)$$

$$O_2 + 4H^+ + 4e \rightarrow 2H_2O \qquad (5)$$

$$2Fe + O_2 + 4H^+ \rightarrow 2Fe^{2+} + 2H_2O \qquad (6)$$

in exactly the same way as corrosion reaction 2 derives from reactions 3 & 4.

Two points need to be made. Firstly, in natural environments, both hydrogen evolution and oxygen reduction may be possible cathodic reactants. Second, any other oxidising agent could be a cathodic reactant, in principle, if it was present in the aqueous environment around the metal.

2.0 THEORY OF CATHODIC PROTECTION

To apply the foregoing to a more everyday situation let us consider a galvanic cell which is defined thus:

2.1 GALVANIC CELL

A cell consisting of two dissimilar metals in contact with each other with a common electrolyte. In such a cell, and let us take the case illustrated in Fig. 1 of copper and steel the corrosion of one of the metals will be accelerated (steel) and the corrosion of the other (copper) will be retarded. We have therefore to establish which metal will corrode (the anode) and which metal will be protected (cathode). The answer to this is provided by the direction of current from one

metal to the other and this direction will be determined by the potential difference between the two metals whilst in solution.

2.2 GALVANIC SERIES

The potential of a metal in solution can be determined in a relative sense, for example by taking a reactive metal such as zinc, and placing it in a sodium chloride solution with copper and measuring current flow, direction and potential generated by their galvanic action. Such an experiment ould be repeated with various combinations of metals in any environment.

An arrangement of metals in a galvanic series is frequently used as a first approximation of the probable direction of the galvanic effects as shown in Table 1. In a galvanic couple involving two metals from the list the one higher in the list will corrode more rapidly in the presence of the one lower down. To make it easier to determine the effects upon one another of the metals generally used in the construction of pipelines, jetties etc. Table 1. shows a practical galvanic series with their potentials measured against a copper sulphate reference electrode. Metals higher in the table corrode more rapidly than those lower down.

METAL	ACTIVE END	VOLTS vs. Cu/ SO_4
Commercially pure Magnesium	1	- 1.75
Magnesium Alloy (6% A1, 3% Zn, 0.15% Mn)	1	- 1.6
Zinc	1	- 1.1
Aluminium Alloy (5% Zinc)	1	- 1.05
Commercially pure Aluminium	1	- 0.8
Mild Steel (new)	1	- 0.5 to - 0.8
Mild Steel (rusted)	1	- 0.2 to - 0.5
Cast Iron	1	- 0.5
Lead	1	- 0.5
Mild Steel in concrete	1	- 0.2
High Silicon Iron	1	- 0 .2
Carbon	1	+ 0.3
	PASSIVE END	

TABLE 1 - PRACTICAL GALVANIC SERIES

The existence of this phenomenon is the basis of cathodic protection. Cathodic Protection is defined as “A means of rendering a metal immune from corrosive attack by causing direct current to flow from its electrolytic environment into the metal from an external source”, therefore by reference to Table 1, if magnesium is connected via a metallic bond to mild steel there will be a potential difference of 1.75 volts - 0.5 volts which equals 1.25 volts, this potential difference will allow sufficient current to flow from the magnesium to the mild steel to arrest corrosive activity at the cathode surface.

2.3 CURRENT FLOW

It is important at this stage to make one or two points clear. For practical use the conventional concept of current flow by corrosion engineers is from positive (+) to negative (-). This is confusing as the conventional representation of current flow is in the opposite direction to the

flow of electrons described above and shown in Fig. 2, so the following points should be remembered.

(1) That conventional current flow from positive (+) to negative (-) will be from the cathode to the anode in the metallic circuit.

(2) That conventional current flow from positive (+) to negative (-) will be from the anode to the cathode in the electrolyte.

(3) That metal is consumed where current leaves the anode to enter the electrolyte.

(4) That metal receiving current from the surrounding electrolyte does not corrode.

With these points in mind it is obvious that if we can make every part of the surface of the metal we are trying to protect collect current it would net be freely corroding, as the buried section of pipeline is in Fig. 3, as the whole surface would be cathodic. This state of affairs is precisely what is achieved by cathodic protection, direct current is passed through the electrolyte to the surface of the metal from an external source. When the levels of current flow are correctly adjusted corrosion can be completely stopped.

2.4 CATHODIC PROTECTION

To achieve this situation two basic methods of cathodic protection can be used; either a system of galvanic anodes or one of impressed current anodes.

The simplified layout of each of these methods is shown in Fig. 4 and shows how the section of corroding pipe in Fig. 3 is brought to a totally cathodic state with the resultant cancellation of current discharging areas.

From an inspection of Fig. 4 it will be seen that the protection current is made to flow in the electrolyte from an earth connection termed a groundbed, installed specifically for the purpose. The materials used for the construction of the groundbed are called anodes and by definition they will be subject to corrosion. Therefore by the use of cathodic protection, corrosion has not been eliminated but merely transferred from the structure to known locations, i.e. the anodes which can be designed to discharge the cathodic protection current for any required time span, and when consumed may be replaced without interruption to the normal function of the structure.

3.0 CRITERIA FOR CATHODIC PROTECTION

PROTECTION LEVELS

Having established how the application of cathodic protection is carried out we must consider if protection has been obtained and if so, is it enough, too little or too much. To continually remove the structure from is environment, to check its rate of corrosion, or not as the case may be, would be uneconomical as well as impractical. The real measurement for determining the condition would be to measure the current density on the pipe surface but this is not possible. We must therefore, determine the condition by other means, and by far the most common is potential measurement.

The basis of this method is that if a current flows onto a protected structure there must be a resultant change in potential of the structure with respect to its environment. This change in potential is a combination of the volt drop across the resistance between the protected structure and the environment, and the polarisation potential developed at the structure surface. This resistance can be increased by any electrical insulator, i.e. coating, tape wrap etc. The net result is that the structure becomes more negative with respect to its environment.

The most desirable point to measure this potential change would be at the structure to environment interface. This usually is only practicable in aqueous media and then not fully, and so we have to resort to potentials measured, in the case of buried structures, i.e. pipelines, directly above the structure or as close as possible.

The reading we now have is the polarised potential plus a portion of the volt drop across the electrolyte and to compensate for this volt drop we take slightly higher levels of potential as being representative of protection. Having outlined where to measure the potential we now must know how to do it, and how much voltage provides protection. The graph in Fig. 5 shows voltage change Vs corrosion rate, and is a guide to protection levels.

To measure a voltage under normal conditions a voltmeter is connected across the circuit. In our case this is not possible and the contact with the electrolyte is made using a reference electrode. This is a stable device used under field conditions and provides reproducible results. Fig. 6 shows how this may be done.

The electrodes most often used in field situations are:

1. The copper/copper sulphate reference, used in soil and freshwater conditions.

2. The silver/silver chloride reference, used in sea water environment.

A third reference in general use in sea water conditions and in some cases buried, is the zinc reference which performs well but is less accurate.

Using a copper/copper sulphate as shown in Fig. 6 to measure a potential before the application of cathodic protection we could expect to see a value of voltage depending upon soil conditions, of between -0.5 and -0.6 volts. If on switching on the system we can shift the

potential in a more negative direction by 0.2 to 0.3 volts as shown in Fig. 4, corrosion action can be completely eliminated.

Cathodic potentials when evaluated using other stable references will show differing levels of voltage for no increase or decrease in protection current. This is due to a variation in the half cell potential. Fig 7 shows a comparison between the three most commonly used references.

4.0 CURRENT DENSITY

As we have already seen, an increase or decrease in the amount of current applied has a direct affect on potential levels. Therefore to ensure that sufficient current is available we must be aware of the conditions which exist on and around the structure. These parameters can be altered by the environment or by coating conditions on the structure and invariably the better the coating the less current is required.

To enable us to quantify the amount of current required current density is expressed in current per unit area. The units being generally shown as mA/M^2 or mA/Ft^2.

If we take as an example a 915mm pile as part of a structure supporting a jetty deck or wharf there are two specific areas which are subject to corrosion action.

1. The Wetted Surface
2. The Buried Surface

There are two methods that can be used to determine the amount of current required to protect this pile. The first by calculation and the second by field trial. Let us first look at the calculation method. If we assume that the overall length of the pile is 70 metres and we know that:

a) 50 metres is buried
b) 20 metres if wetted

We can by simple means establish in terms of area that:

a) will be 144 $mtrs^2$
b) will be 57 $mtrs^2$

We can by reference to Table 1, see that if our pile were in Indonesian waters the current required for protection would be:

ENVIRONMENT	LOCATION	mA/m^2
Seawater	Cook Inlet	380 - 430
(Bare Steel)	North Sea	90 - 160
	Persian Gulf	80 - 110
	US West Coast	80 - 90
	Gulf of Mexico	50 - 60
	Indonesia	50 - 50
Soil	Poorly coated	0.1
(Bare Steel)	Well coated	0.03
	Very well coated	0.003

TABLE 1 -CURRENT DENSITIES FOR CATHODIC PROTECTION

a) Wetted $144 \times 60 \times 10^{-3}$ Amps
b) Buried $57 \times 30 \times 10^{-3}$ Amps

Total current would equal 10.35 Amps .

This system of determining current requirement is as close as can be approached to a real figure by the use of calculation and generally errs on the side of safety. This method of determining current requirement poses no great problem on bare structures, but can run into difficulty in the case of coated structures as one can never be sure of the coating condition on structures that have been in service without any means of protection. Therefore, where possible it is desirable to actually measure the current required to shift the potential by setting up a temporary impressed current system and measure current flow and potential shift.

5.0 ELECTROLYTE RESISTIVITY

The ability of a current to flow through a conductor is a function of its resistance which is in turn dependent upon the resistivity of the conductor material and can be determined by measuring the resistance between the faces of a specific cube of the material and the units are expressed for our purposes in ohm per cm cube. The resistance of the volume of electrolyte will increase if the cube is distorted so that the distance between the measuring faces is increased and will decrease if the area of these faces is increased. Thus the unit should be described as the ohm/cm^3 or ohm.m and this is true of electrolytic conductors as well as metallic conductors. This property is intrinsic, that is that it depends entirely on the substance and not upon its dimensions.

The resistivity of the electrolyte has an effect on the corrosion rate that takes place, and generally the lower the resistivity the higher the corrosion rate because the lower resistance allowing positive current to flow more easily from the anode to cathode in the electrolyte.

Therefore, it is necessary to measure the resistivity of electrolyte around a structure to define its corrosivity. As the values of resistivity may vary from less than 0.2 ohm.m for sea water to thousands of ohm.m for soil or rock a general guide to predict soil resistivity based on resistivity is shown in Table 2 below.

OHM.M	DESCRIPTION
Below 5	Very corrosive
5 - 10	Corrosive
10 - 20	Moderately corrosive
20 - 100	Mildly corrosive
Above 100	Progressively less corrosive

TABLE 6: SOIL RESISTIVITY VS CORROSIVITY

To determine the values of resistivity in the field we can adopt one of the two methods:

1) The Wenner four pin method

2) Soil resistivity box

In the former method the pins are placed in the ground in a straight line and at uniform spacing as shown in Fig. 8. The depth (b) must be small with respect to the spacing (a). The resistance is determined by the ratio R = E/I and the resistivity is given by

$$\rho = 2\pi a R$$

Using a soil box the resistance measured is that between the two pins not the entire length of the box. Current is introduced by means of the two end plates and the potential is measured across the two pins. The resistivity being determined from the formula

$$\rho = R \frac{WD}{L}$$

The value of R being determined by E/I and the other components of equation from the soil box shown in Fig. 9.

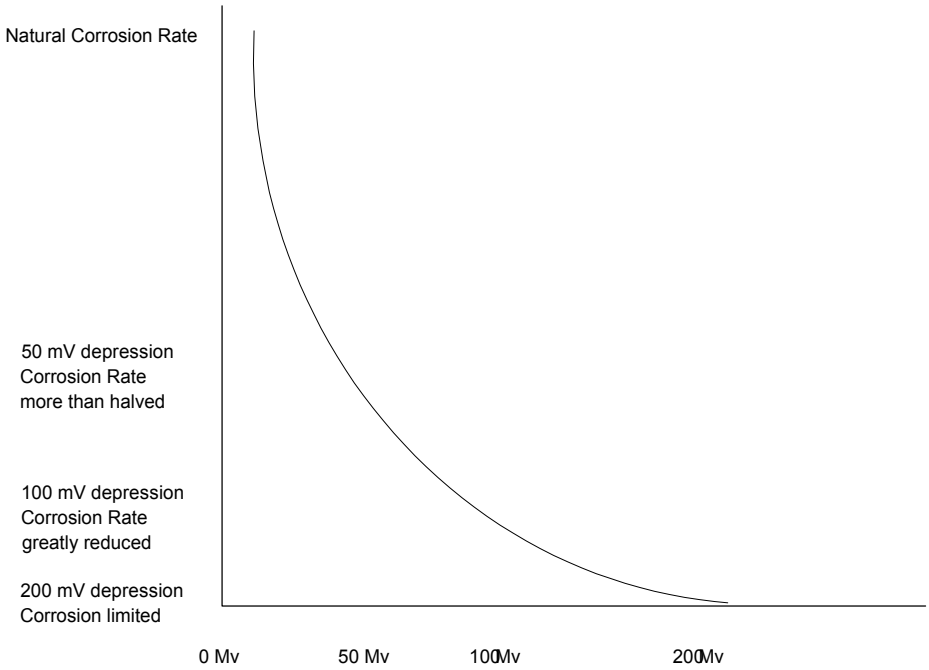

FIG 5. NEGATIVE POTENTIAL SHIFT VS CORRODING STEEL

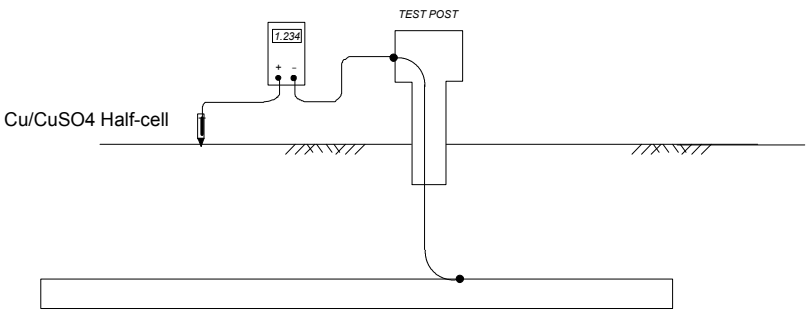

FIG 6.STRUCTURE TO SOIL POTENTIAL MEASUREMENT

STD/003/3600

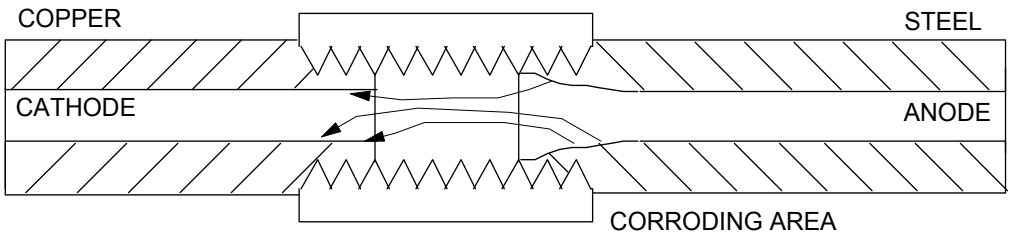

FIG 1. GALVANIC COUPLE BETWEEN COPPER AND STEEL PIPE

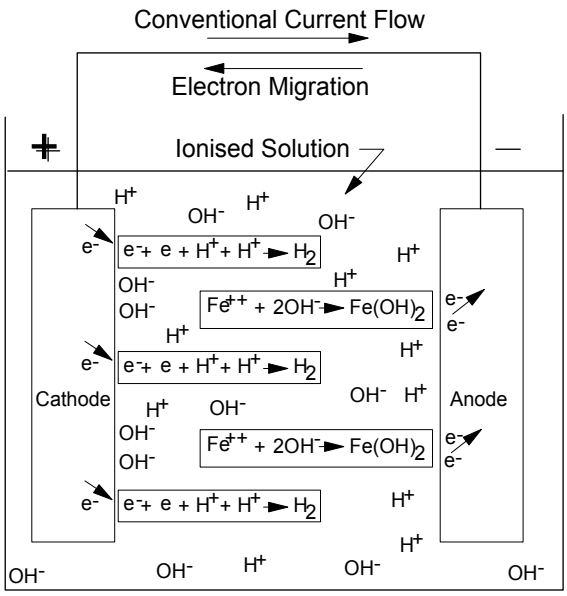

FIG 2. REPRESENTATION OF THE CORROSION OF IRON

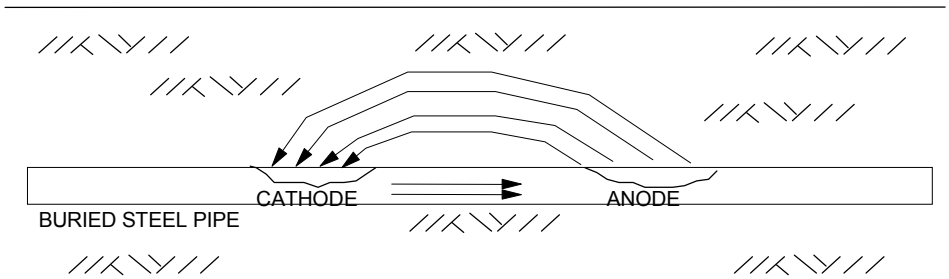

FIG 3. DIRECT CURRENT FLOW ON A TYPICAL CORRODING STRUCTURE

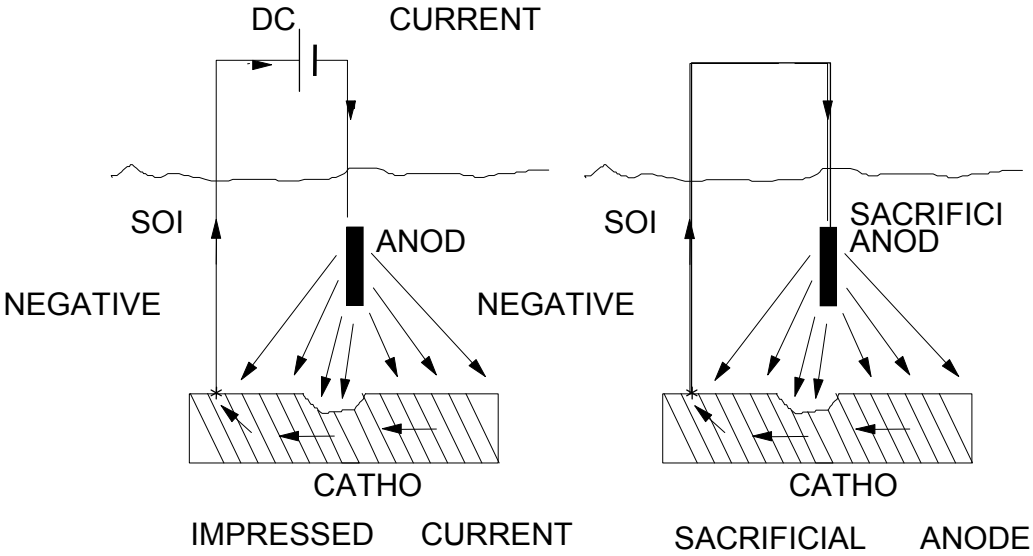

FIG 4. CATHODIC PROTECTION OF STEEL IN SOIL